# 7.5MHz, 16V Rail-to-Rail Input/Output Low Power Operational Amplifiers

## Features

- Low Quiescent Current:
  900μA at 12V supply
  710μA at 5V supply
- Gain Bandwidth Product: 7.5MHz
- Operates on 3V ~ 16V Supplies
- Slew Rate: 10V/μs
- Rail-to-Rail Input and Output (RRIO)
- Unity Gain Stable
- No Phase Reversal
- Extended Temperature Ranges
  From -40°C to +125°C
- Small Packaging
  COS9161 available in SOT23-5/SOP-8
  COS9162 available in SOP-8/MSOP-8
  COS9164 available in SOP14/TSSOP14

## Applications

- White Goods
- Portable Equipment
- Sensor Conditioning
- Analog Active Filters
- Configuration control and Print Support
- Battery Powered Systems
- Transducer Interfaces

## General Description

The COS9161 (single), COS9162 (dual) and COS9164 (quad) are low power, rail-to-rail input and output amplifiers operated on 3V to 16V supplies. Despite their low quiescent current, the COS916x family provides excellent overall performance and versatility. They have both rail-to-rail input and output range. The output voltage swing extends to within 30mV of each rail, providing the maximum output dynamic range with excellent overdrive recovery.

COS9161/2/4 family is unity gain stable and has a gain bandwidth product of 7.5MHz (typical). They provide high CMRR and PSRR performance and can operate from a single supply voltage as high as 16V. These features make the COS9161/2/4 family well suited for single-supply, battery-powered applications. They can be used as plus-in replacements for many commercially available op-amps to reduce power and improve input/output range and performance.

Rev1.2

Copyright@2018 Cosine Nanoelectronics Inc. All rights reserved

The information provided here is believed to be accurate and reliable. Cosine Nanoelectronics assumes no reliability for inaccuracies and omissions. Specifications described and contained here are subjected to change without notice on the purpose of improving the design and performance. All of this information described herein should not be implied or granted for any third party.

## 1. Pin Configuration and Functions

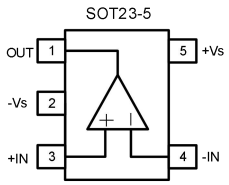


COS9161

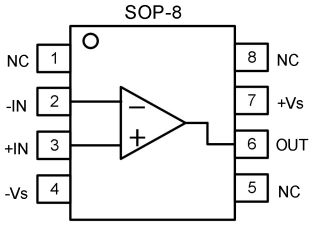


COS9161

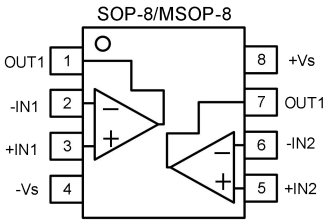


COS9162

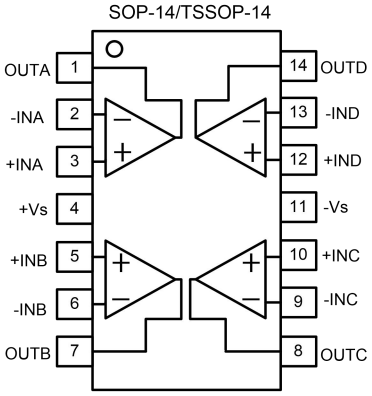


COS9164

### Pin Functions

| Name | Description | Note |
|---|---|---|
| +Vs | Positive power supply | A bypass capacitor of 0.1μF as close to the part as possible should be placed between power supply pins or between supply pins and ground. |
| -Vs | Negative power supply or ground | If it is not connected to ground, bypass it with a capacitor of 0.1μF as close to the part as possible. |
| -IN | Negative input | Inverting input of the amplifier. Voltage range of this pin can go from -Vs -0.3V to +Vs + 0.3V. |
| +IN | Positive input | Non-inverting input of the amplifier. This pin has the same voltage range as –IN. |
| OUT | Output | The output voltage range extends to within millivolts of each supply rail. |
| NC | No connection | |

## 2. Package and Ordering Information

| Model | Channel | Order Number | Package | Package Option | Marking Information |
|---|---|---|---|---|---|
| COS9161 | 1 | COS9161TR | SOT23-5 | Tape and Reel, 3000 | C9161 |
| | | COS9161SR | SOP-8 | Tape and Reel, 4000 | COS9161 |
| COS9162 | 2 | COS9162SRA | SOP-8 | Tape and Reel, 4000 | COS9162SR |
| | | COS9162SRB | SOP-8 | Tape and Reel, 4000 | COS9162SR |
| | | COS9162SRC | SOP-8 | Tape and Reel, 4000 | COS9162SR |
| | | COS9162MR | MSOP-8 | Tape and Reel, 4000 | COS9162MR |
| COS9164 | 4 | COS9164SR | SOP-14 | Tape and Reel, 3000 | COS9164SR |
| | | COS9164TR | TSSOP-14 | Tape and Reel, 3000 | COS9164TR |

# 3. Product Specification

## 3.1 Absolute Maximum Ratings (1)

| Parameter | Rating | Units |
|---|---|---|
| Power Supply: +Vs to -Vs | 16 | V |
| Input Voltage | -Vs -0.5V to +Vs + 0.5V | V |
| Input Current (2) | 10 | mA |
| Storage Temperature Range | -65 to 150 | °C |
| Junction Temperature | 150 | °C |
| Operating Temperature Range | -40 to 125 | °C |
| ESD Susceptibility, HBM | 2000 | V |

(1) Stresses exceeding the absolute maximum ratings may damage the device. The device may not function or be operable above the recommended operating conditions and stressing the parts to these levels is not recommended. In addition, extended exposure to stresses above the recommended operating conditions may affect device reliability. The absolute maximum ratings are stress ratings only.
(2) Input terminals are diode-clamped to the power-supply rails. Input signals that can swing more than 0.5V beyond the supply rails should be current-limited to 10mA or less.

## 3.2 Thermal Data

| Parameter | Rating | Unit |
|---|---|---|
| Package Thermal Resistance, $R_{\theta JA}$ (Juntion-to-ambient) | 190 (SOT23-5)<br>206 (MSOP8)<br>155 (SOP8)<br>105 (TSSOP14)<br>82 (SOP14) | °C/W |

## 3.3 Recommended Operating Conditions

| Parameter | Rating | Unit |
|---|---|---|
| DC Supply Voltage | 3 ~ 12 | V |
| Input common-mode voltage range | -Vs ~ +Vs | V |
| Operating ambient temperature | -40 ~ +85 | °C |

### 3.4 Electrical Characteristics

($+V_S$=+12V, $-V_S$=0, $V_{CM}$=$V_S$/2, $T_A$=+25°C, $R_L$=10kΩ to $V_S$/2, unless otherwise noted)

| Parameter | Symbol | Conditions | Min | Typ | Max | Unit |
|---|---|---|---|---|---|---|
| **Input Characteristics** | | | | | | |
| Input Offset Voltage | $V_{OS}$ | COS9162A | | ±0.6 | ±2 | mV |
| | | COS9162B | | | ±5 | |
| | | COS9162C | | | ±10 | |
| Input Offset Voltage Drift | $\Delta V_{OS}/\Delta T$ | -40 to 125°C | | ±1.0 | | μV/°C |
| Input Bias Current | $I_B$ | | | ±10 | | pA |
| Input Offset Current | $I_{OS}$ | | | ±10 | | pA |
| Common-Mode Voltage Range | $V_{CM}$ | | -0.1 | | 12.1 | V |
| Common-Mode Rejection Ratio | CMRR | $V_{CM}$ =0.1V to 15.9V | | 125 | | dB |
| Open-Loop Voltage Gain | AOL | $V_O$=0.2V to 15.8V | | 120 | | dB |
| **Output Characteristics** | | | | | | |
| Output Voltage Swing from Rail | | $R_L$=1MΩ | | 3 | | mV |
| | | $R_L$=100kΩ | | 30 | | mV |
| | | $R_L$=10kΩ | | 300 | | mV |
| Short-Circuit Current | $I_{SR}$ | | | ±50 | | mA |
| **Power Supply** | | | | | | |
| Operating Voltage Range | | | 3 | | 16 | V |
| Power Supply Rejection Ratio | PSRR | $V_S$ = 3.5V to 16V | 80 | 100 | | dB |
| Quiescent Current / Amplifier | $I_Q$ | $V_S$=12V | | 900 | | μA |
| | | $V_S$=5V | | 710 | | μA |
| | | $V_S$=3V | | 300 | | μA |
| **Dynamic Performance** | | | | | | |
| Gain Bandwidth Product | GBWP | G=+1 | | 7.5 | | MHz |
| Slew Rate | SR | G = +1 , 2V Output Step | | 10 | | V/μs |
| **Noise Performance** | | | | | | |
| Voltage Noise Density | $e_n$ | f=1kHz | | 10 | | nV/ √Hz |

## 4.0 Application Notes

### Driving Capacitive Loads

Driving large capacitive loads can cause stability problems for voltage feedback op amps. As the load capacitance increases, the feedback loop's phase margin decreases, and the closed loop bandwidth is reduced. This produces gain peaking in the frequency response, with overshoot and ringing in the step response. A unity gain buffer (G = +1) is the most sensitive to capacitive loads, but all gains show the same general behavior.

When driving large capacitive loads with these op amps (e.g., > 100 pF when G = +1), a small series resistor at the output ($R_{ISO}$ in Figure 1) improves the feedback loop's phase margin (stability) by making the output load resistive at higher frequencies. It does not, however, improve the bandwidth.

To select $R_{ISO}$, check the frequency response peaking (or step response overshoot) on the bench. If the response is reasonable, you do not need $R_{ISO}$. Otherwise, start $R_{ISO}$ at 1 kΩ and modify its value until the response is reasonable.

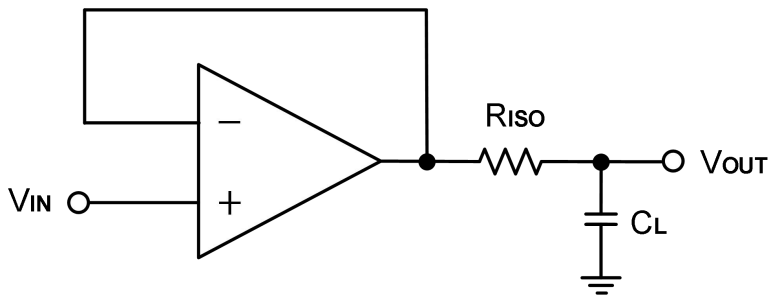


Figure 1. Indirectly Driving Heavy Capacitive Load

An improvement circuit is shown in Figure 2. It provides DC accuracy as well as AC stability. $R_F$ provides the DC accuracy by connecting the inverting signal with the output, $C_F$ and $R_{ISO}$ serve to counteract the loss of phase margin by feeding the high frequency component of the output signal back to the amplifier's inverting input, thereby preserving phase margin in the overall feedback loop.

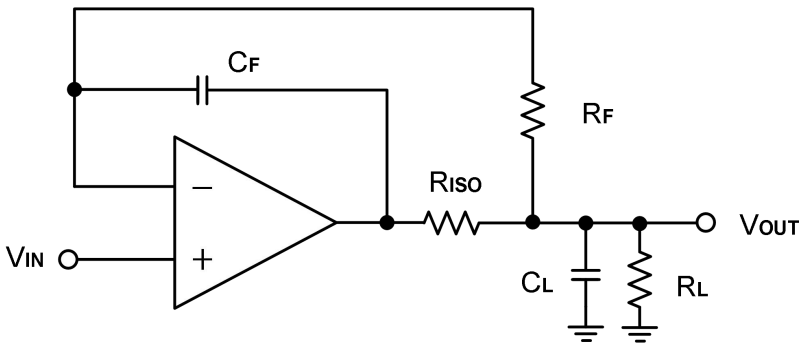


Figure 2. Indirectly Driving Heavy Capacitive Load with DC Accuracy

For the inverting configuration, there are two others ways to increase the phase margin: (a) by increasing the amplifier's gain or (b) by placing a capacitor in parallel with the feedback resistor to counteract the parasitic capacitance associated with inverting node, as shown in Figure 3.

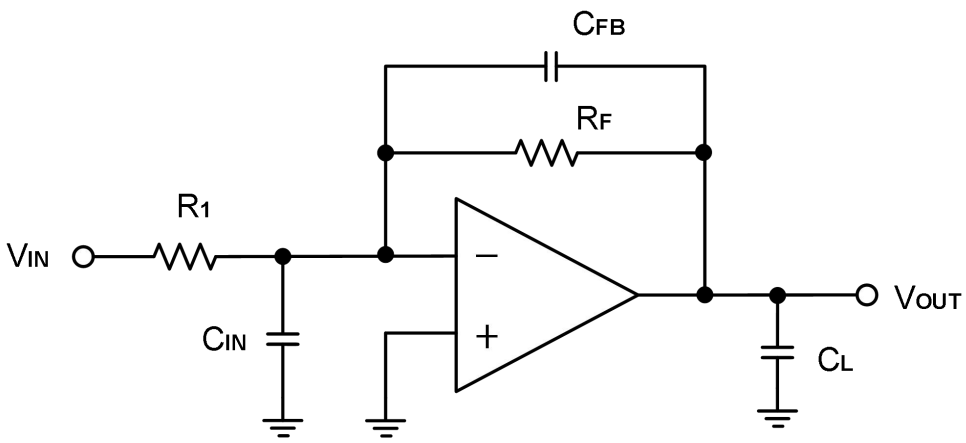


Figure 3. Adding a Feedback Capacitor in the Inverting Configuration

## Power-Supply Bypassing and Layout

The COS9161/2/4 operates from a single +3V to +16V supply or dual ±1.5V to ±8V supplies. For single-supply operation, bypass the power supply +Vs with a 0.1μF ceramic capacitor which should be placed close to the +Vs pin. For dual-supply operation, both the +Vs and the -Vs supplies should be bypassed to ground with separate 0.1μF ceramic capacitors. 2.2μF tantalum capacitor can be added for better performance.

The length of the current path is directly proportional to the magnitude of parasitic inductances and thus the high frequency impedance of the path. High speed currents in an inductive ground return create an unwanted voltage noise. Broad ground plane areas will reduce the parasitic inductance. Thus a ground plane layer is important for high speed circuit design.

## Typical Application Circuits

### Differential Amplifier

The circuit shown in Figure 4 performs the differential function. If the resistors ratios are equal ($R_4$ / $R_3$ = $R_2$ / $R_1$), then $V_{OUT} = (V_{IP} – V_{IN}) \times R_2 / R_1 + V_{REF}$.

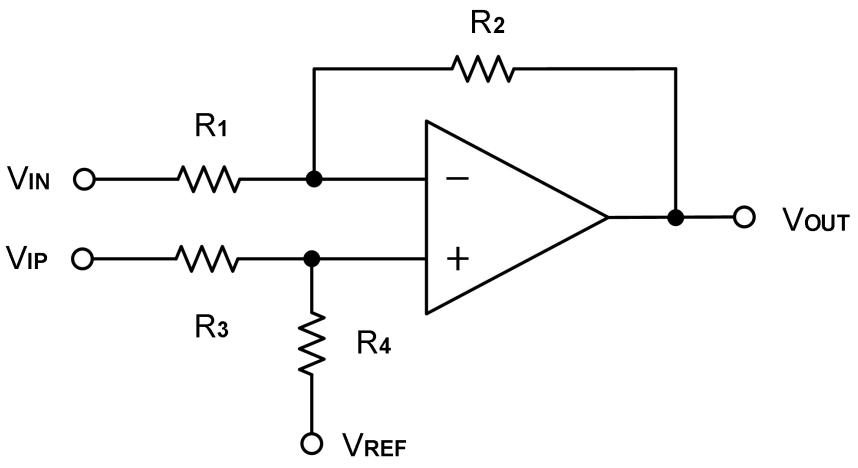


Figure 4. Differential Amplifier

**Low Pass Active Filter**

When receiving low-level signals, limiting the bandwidth of the incoming signals into the system is often required. The simplest way to establish this limited bandwidth is to place an RC filter at the noninverting terminal of the amplifier. If even more attenuation is needed, a multiple pole filter is required. The Sallen-Key filter can be used for this task, as Figure 5. For best results, the amplifier should have a bandwidth that is 8 to 10 times the filter frequency bandwidth. Failure to follow this guideline can result in reduction of phase margin. The large values of feedback resistors can couple with parasitic capacitance and cause undesired effects such as ringing or oscillation in high-speed amplifiers. Keep resistors value as low as possible and consistent with output loading consideration.

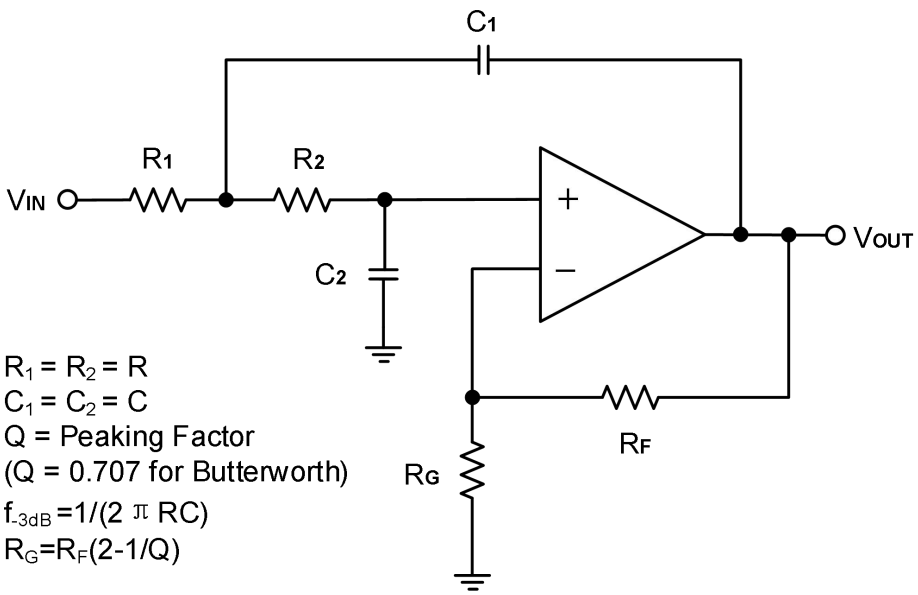


Figure 5. Two-Pole Low-Pass Sallen-Key Active Filter

# 5. Package Information

## 5.1 SOT23-5 (Package Outline Dimensions)

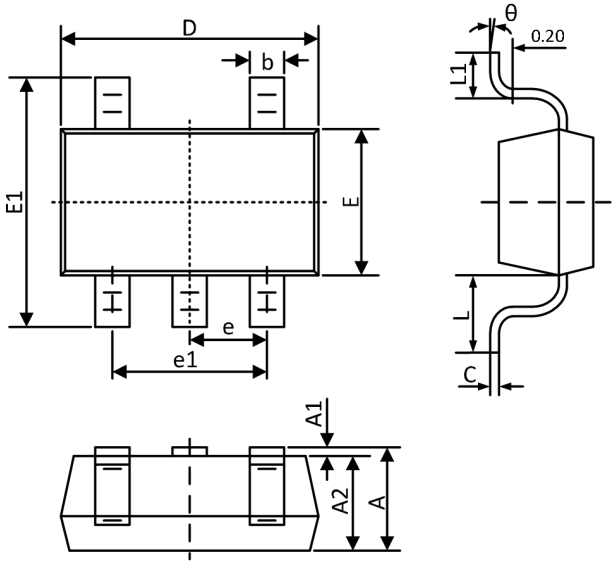


| Symbol | Dimensions In Millimeters | | Dimensions In Inches | |
|---|---|---|---|---|
| | MIN | MAX | MIN | MAX |
| A | 1.050 | 1.250 | 0.041 | 0.049 |
| A1 | 0.000 | 0.100 | 0.000 | 0.004 |
| A2 | 1.050 | 1.150 | 0.041 | 0.045 |
| b | 0.300 | 0.400 | 0.012 | 0.016 |
| c | 0.100 | 0.200 | 0.004 | 0.008 |
| D | 2.820 | 3.020 | 0.111 | 0.119 |
| E | 1.500 | 1.700 | 0.059 | 0.067 |
| E1 | 2.650 | 2.950 | 0.104 | 0.116 |
| e | 0.950TYP | | 0.037TYP | |
| e1 | 1.800 | 2.000 | 0.071 | 0.079 |
| L | 0.700REF | | 0.028REF | |
| L1 | 0.300 | 0.600 | 0.012 | 0.024 |
| θ | 0° | 8° | 0° | 8° |

## 5.2 SOP8 (Package Outline Dimensions)

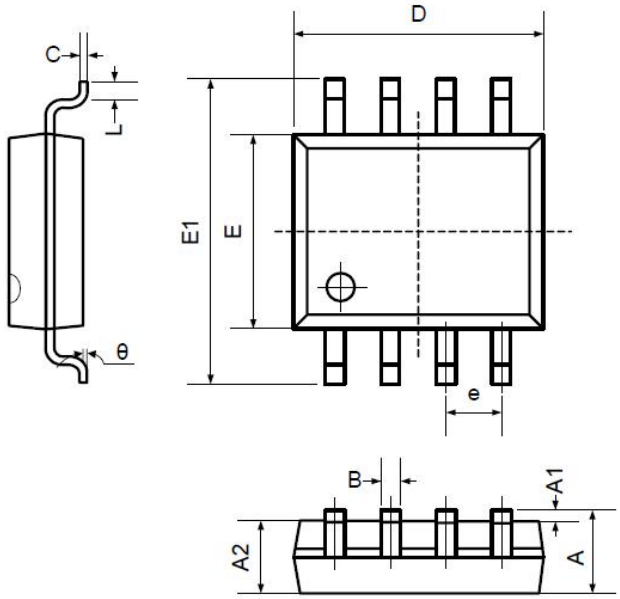


| Symbol | Dimensions In Millimeters | | Dimensions In Inches | |
|---|---|---|---|---|
| | Min | Max | Min | Max |
| A | 1.350 | 1.750 | 0.053 | 0.069 |
| A1 | 0.100 | 0.250 | 0.004 | 0.010 |
| A2 | 1.350 | 1.550 | 0.053 | 0.061 |
| B | 0.330 | 0.510 | 0.013 | 0.020 |
| C | 0.190 | 0.250 | 0.007 | 0.010 |
| D | 4.780 | 5.000 | 0.188 | 0.197 |
| E | 3.800 | 4.000 | 0.150 | 0.157 |
| E1 | 5.800 | 6.300 | 0.228 | 0.248 |
| e | 1.270TYP | | 0.050TYP | |
| L | 0.400 | 1.270 | 0.016 | 0.050 |
| θ | 0° | 8° | 0° | 8° |

### 5.3 MSOP8 (Package Outline Dimensions)

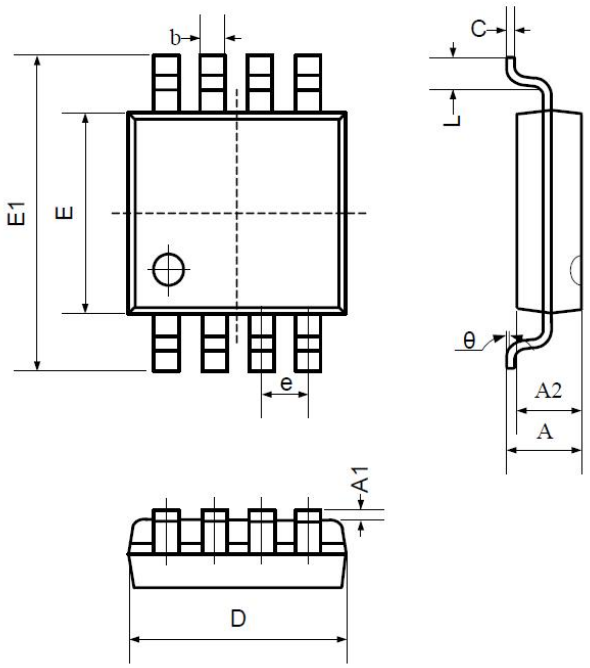


| Symbol | Dimensions In Millimeters | | Dimensions In Inches | |
|---|---|---|---|---|
| | Min | Max | Min | Max |
| A | 0.800 | 1.200 | 0.031 | 0.047 |
| A1 | 0.000 | 0.200 | 0.000 | 0.008 |
| A2 | 0.760 | 0.970 | 0.030 | 0.038 |
| b | 0.30 TYP | | 0.012 TYP | |
| c | 0.15 TYP | | 0.006 TYP | |
| D | 2.900 | 3.100 | 0.114 | 0.122 |
| e | 0.65 TYP | | 0.026 TYP | |
| E | 2.900 | 3.100 | 0.114 | 0.122 |
| E1 | 4.700 | 5.100 | 0.185 | 0.201 |
| L | 0.410 | 0.650 | 0.016 | 0.026 |
| θ | 0° | 6° | 0° | 6° |

### 5.4 SOP14 (Package Outline Dimensions)

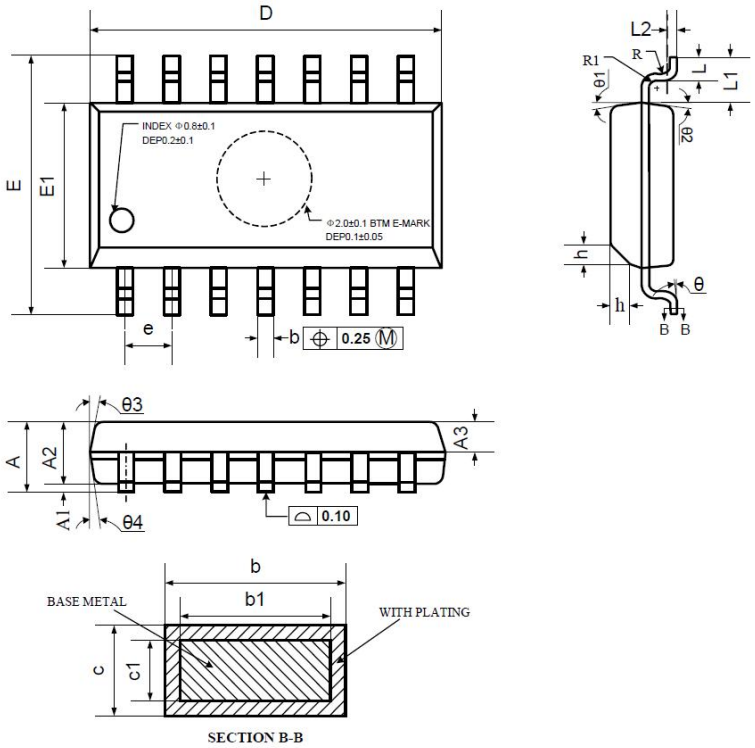


| Symbol | Dimensions In Millimeters | | |
|---|---|---|---|
| | MIN | NOM | MAX |
| A | 1.35 | 1.60 | 1.75 |
| A1 | 0.10 | 0.15 | 0.25 |
| A2 | 1.25 | 1.45 | 1.65 |
| A3 | 0.55 | 0.65 | 0.75 |
| b | 0.36 | | 0.49 |
| b1 | 0.35 | 0.40 | 0.45 |
| c | 0.16 | | 0.25 |
| c1 | 0.15 | 0.20 | 0.25 |
| D | 8.53 | 8.63 | 8.73 |
| E | 5.80 | 6.00 | 6.20 |
| E1 | 3.80 | 3.90 | 4.00 |
| e | 1.27 BSC | | |
| L | 0.45 | 0.60 | 0.80 |
| L1 | 1.04 REF | | |
| L2 | 0.25 BSC | | |
| R | 0.07 | | |
| R1 | 0.07 | | |
| h | 0.30 | 0.40 | 0.50 |
| θ | 0° | | 8° |
| θ1 | 6° | 8° | 10° |
| θ2 | 6° | 8° | 10° |
| θ3 | 5° | 7° | 9° |
| θ4 | 5° | 7° | 9° |

### 5.5 TSSOP14 (Package Outline Dimensions)

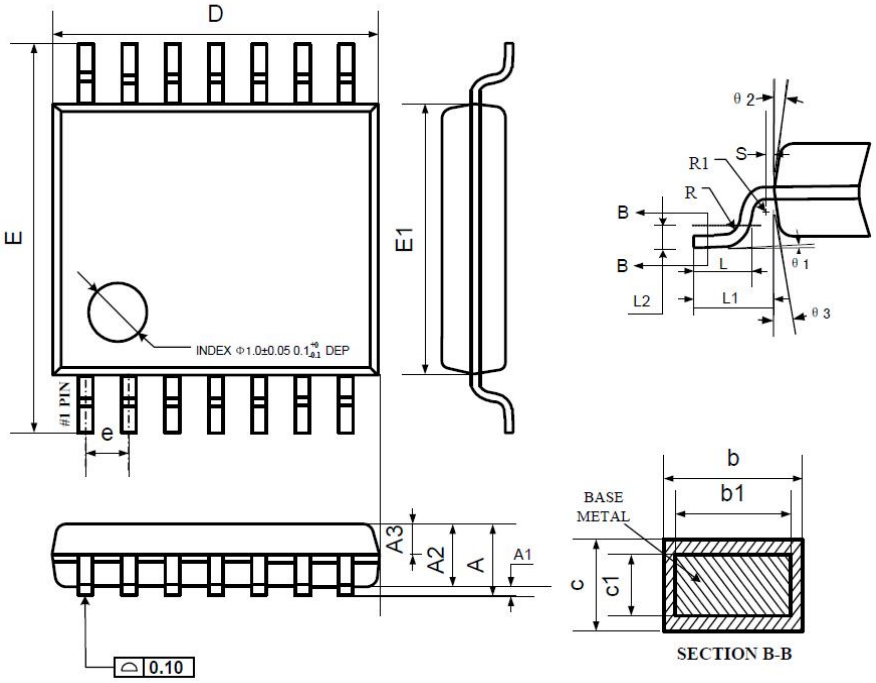


| Symbol | Dimensions In Millimeters | | |
|---|---|---|---|
| | MIN | NOM | MAX |
| A | — | — | 1.20 |
| A1 | 0.05 | — | 0.15 |
| A2 | 0.90 | 1.00 | 1.05 |
| A3 | 0.34 | 0.44 | 0.54 |
| b | 0.20 | — | 0.28 |
| b1 | 0.20 | 0.22 | 0.24 |
| c | 0.10 | — | 0.19 |
| c1 | 0.10 | 0.13 | 0.15 |
| D | 4.86 | 4.96 | 5.06 |
| E | 6.20 | 6.40 | 6.60 |
| E1 | 4.30 | 4.40 | 4.50 |
| e | 0.65 BSC | | |
| L | 0.45 | 0.60 | 0.75 |
| L1 | 1.00 REF | | |
| L2 | 0.25 BSC | | |
| R | 0.09 | — | — |
| R1 | 0.09 | — | — |
| S | 0.20 | — | — |
| θ1 | 0° | — | 8° |
| θ2 | 10° | 12° | 14° |
| θ3 | 10° | 12° | 14° |

## 6. Related Parts

| Part Number | Description |
|---|---|
| COS6042 | 24kHz, 0.5μA, Nano-Power Op Amps, 1.4V to 5.5V Supply |
| COS8042 | 160MHz, 5.5mA, High Speed Op Amps, 3V to 12V Supply |
| COS2172 | 10MHz, 1.2mA, RRIO Op Amps, 4.5 to 40V Supply |
| COS2333 | 350kHz, 18μA, Precision Op Amps, 1.8 to 5.5V Supply, Zero Drift, Vos<10μV |
| COS8552 | 1.5MHz, 55μA, Precision Op Amps, 1.8 to 5.5V Supply, Zero Drift, Vos<10μV |
| COS2388 | 9MHz, 570μA, Precision Op Amps, 1.8 to 5.5V Supply, Zero Drift, Vos<10μV |
| COS2227 | 10MHz, 1.3mA, Precision Op Amps, 4.5 to 36V Supply, Vos<50μV |
| COS2182 | 5MHz, 580μA, RRIO Precision Op Amps, 4.5 to 40V Supply, Vos<50μV |
| COS620 | 1.5MHz, 1.3mA, Instrumentation Amps, 4.5 to 36V Supply, Vos<50μV |
| COSINA333 | 150kHz, 65μA, Instrumentation Amps, 1.8 to 5.5V Supply, Vos<25μV |